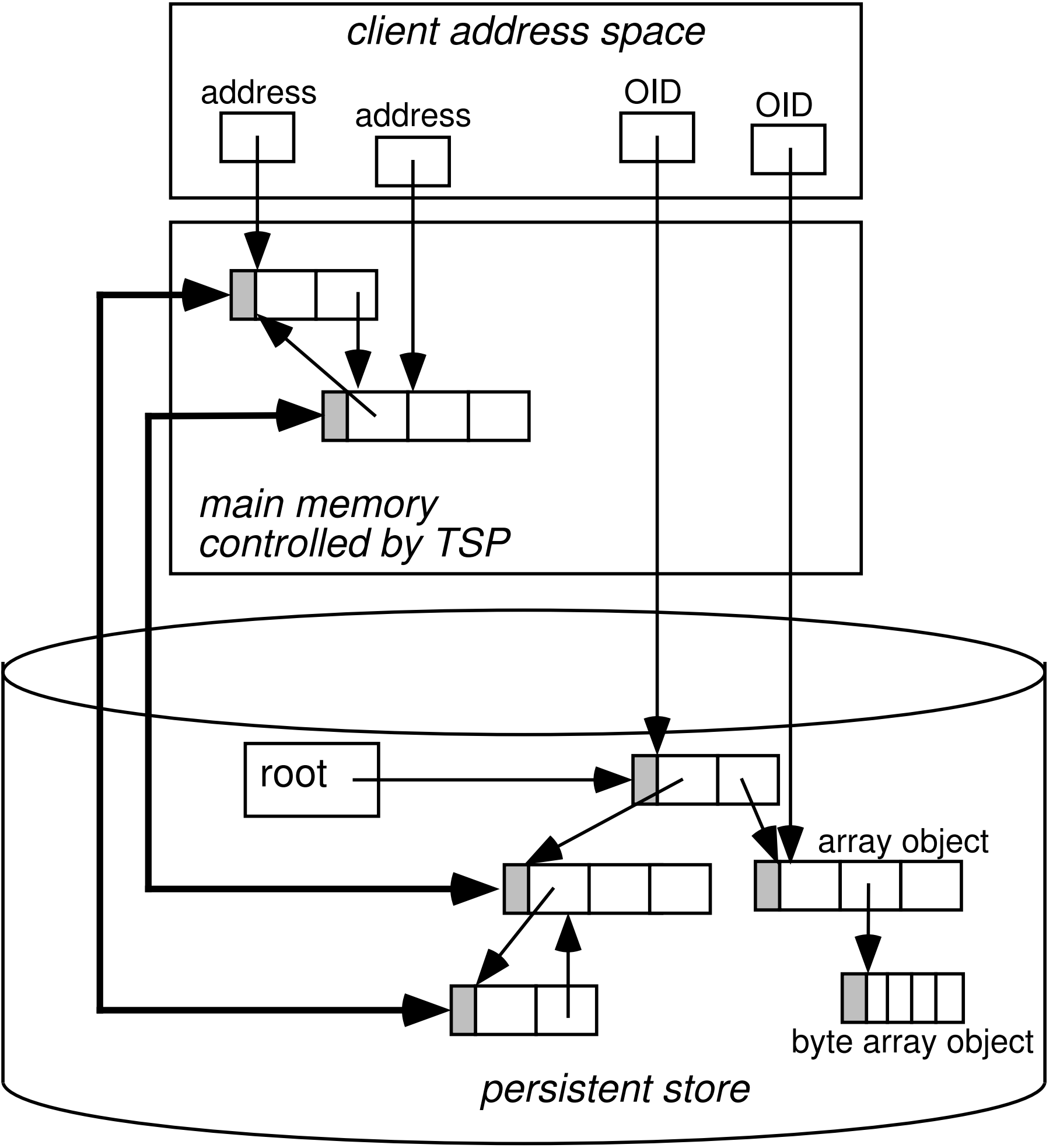
client address space
address
address
OID
OID
main memory
controlled by TSP
root
array object
byte array object
persistent store